REPLACEMENT TIE BAR W/LED LIGHT

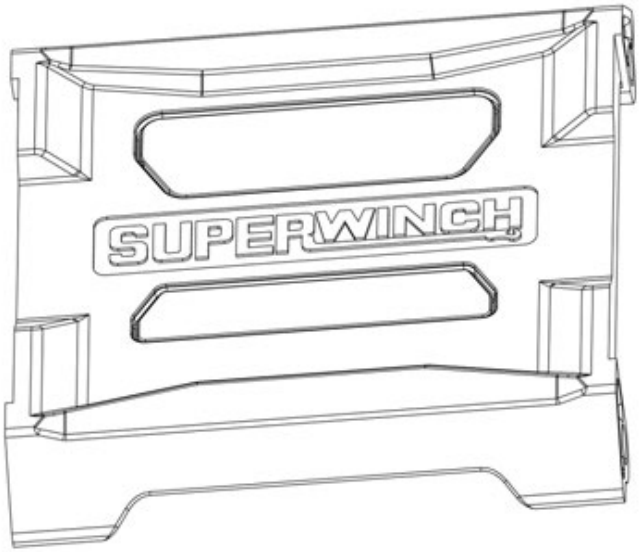

PART NUMBER:

90-42794

SAVE THESE INSTRUCTIONS

CONTENTS

ITEM	QUANTITY	DESCRIPTION
1	1	TIE BAR
ANTI-SEIZE LUBRICANT MUST BE USED ON ALL STAINLESS STEEL FASTENERS TO PREVENT THREAD DAMAGE AND GALLING		

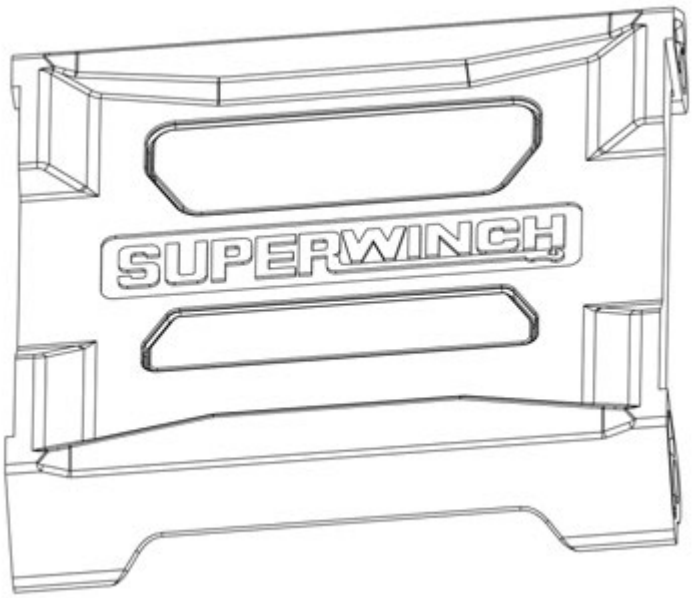

Item 1

INSTALLATION INSTRUCTIONS

1. Remove contents from box, verify if all parts listed are present and free from damage. **Failure to identify damage before installation could lead to a rejection of any claim.**
2. Carefully read and understand all instructions before attempting installation. **Ensure that all mounting hardware is torqued to specifications prior to use.**

3. Disconnect the power cable and ground cable from the battery.
4. Place the winch upright so it sits on the gearbox as shown in **Figure 1**.
5. Disconnect the red and black drum light wires from the wiring harness by pulling the wires apart on each side of the connectors. See **Figure 2.**
6. On each side of the tie bar, remove the two bolts attaching it to the winch. Remove them using a 4mm Allen Key. See **Figures 1 and 3.**
7. Remove the original tie bar.
8. Install the replacement tie bar using the hardware removed in step 6. Make sure the replacement tie bar is installed in the same orientation as the original. See **Figure 1**.
9. Tighten the hardware installed in the previous step to 35 in-lb.
10. Connect the power cable and ground cable to the battery.

Figure 1

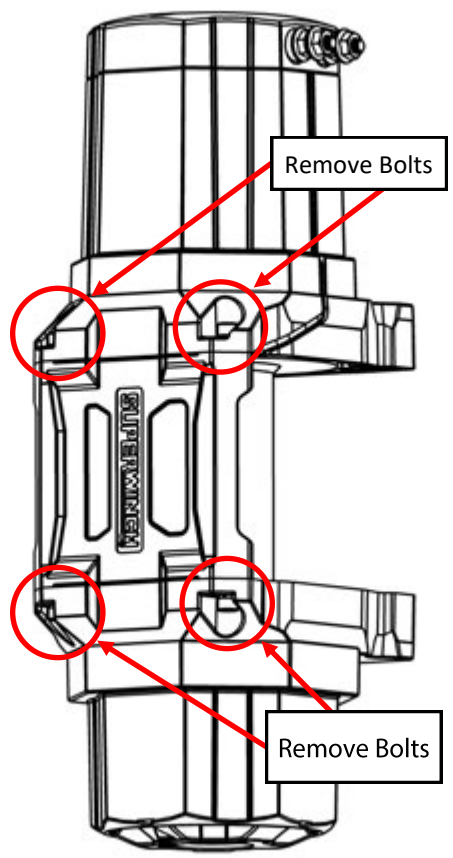

Figure 2

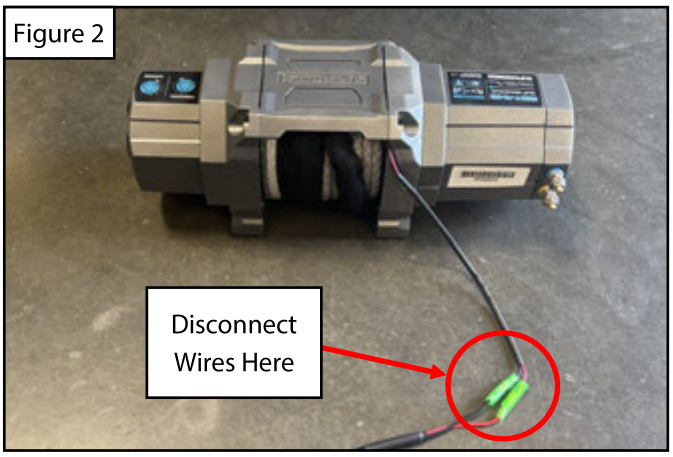

Figure 3

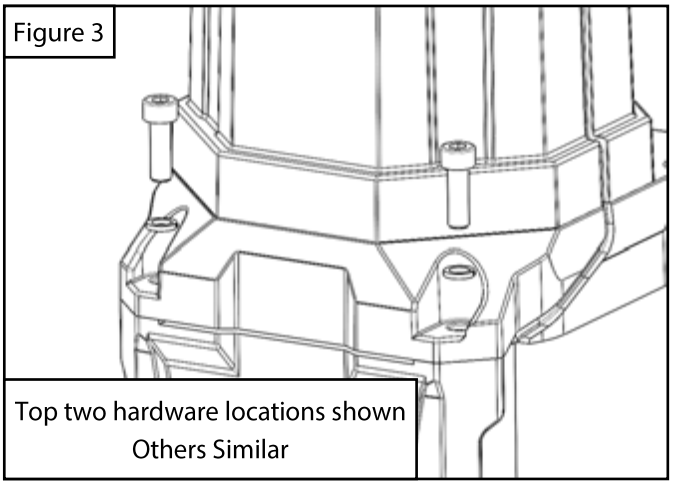

Failure to follow these instructions could lead to death, personal injury, and / or property damage.

FASTENERS:

All SUPERWINCH supplied fasteners must be utilized and installed in accordance with the installation instructions and apply torque to the specifications as defined. DOUBLE CHECK ALL FASTENERS BEFORE INITIAL USE, AND PERIODICALLY IN THE FUTURE TO ENSURE PROPER FUNCTION AND SAFETY.

EYE PROTECTION:

ALWAYS WEAR SAFETY GLASSES OR GOGGLES DURING THE INSTALLATION PROCESS TO AVOID PERSONAL INJURY.

FOR CALIFORNIA RESIDENTS ONLY-PROP 65 WARNING:

Some products may contain chemicals such as DEHP, which can cause cancer, birth defects or other reproductive harm. For more info go to www.p65warnings.ca.gov

For more information on this and other products, or to be put in contact with a Superwinch sales rep or distributor, call (800) 323- 2031 or email info@superwinch.com

SUPERWINCH
320 W. COVINA BLVD.
SAN DIMAS, CA 91773

© 2019 SUPERWINCH®, Superwinch®, and S Superwinch® (design) are registered trademarks of Superwinch Inc. in the United States and/or other countries.

P.N.: 75-9042794-RevA ECO #: W25-0104 Date: 8/28/2025